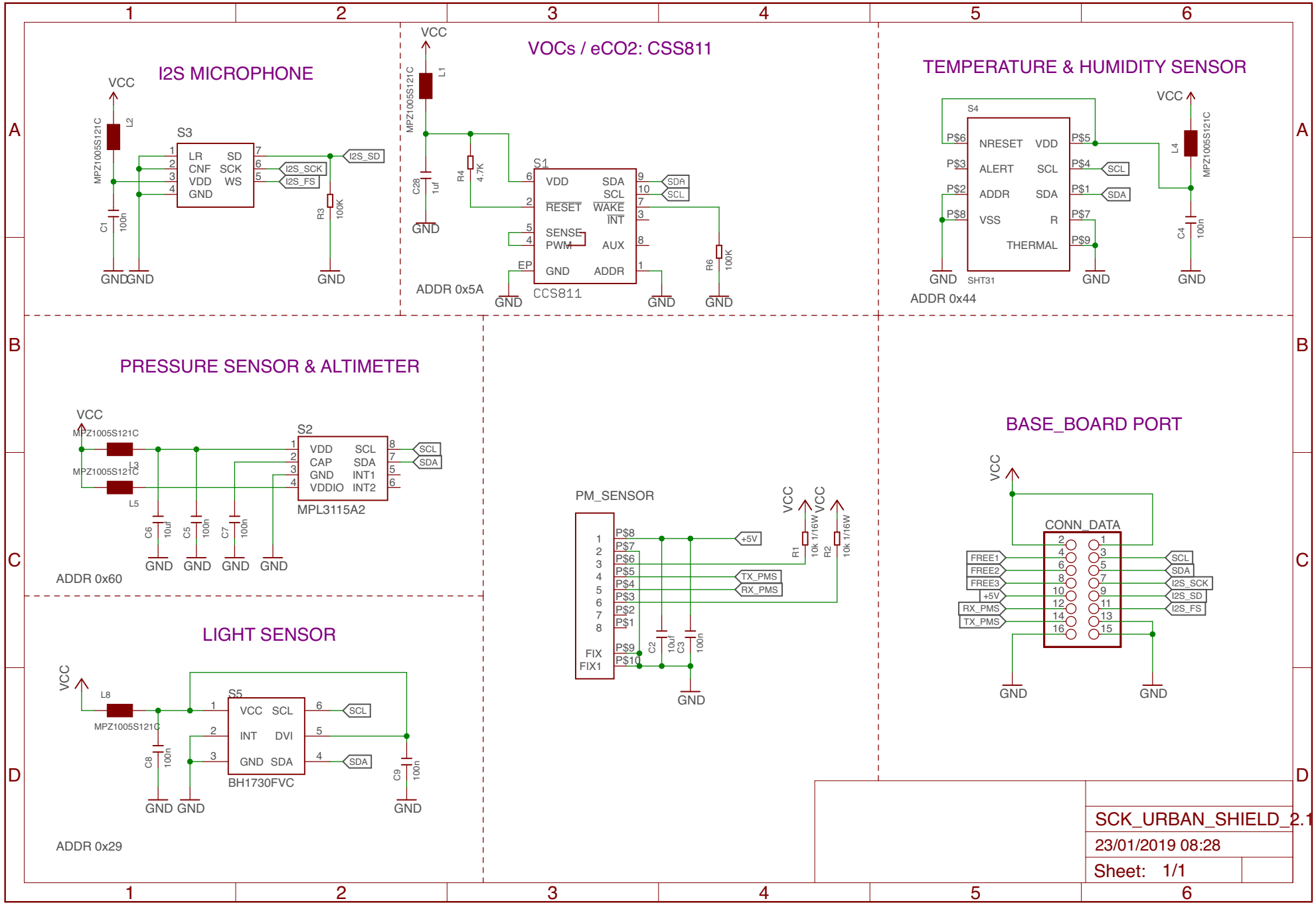
I2S MICROPHONE
VCC
L2
MPZ1005S121C
S3
LR SD
CNF SCK
VDD WS
GND
I2S_SD
I2S_SCK
I2S_FS
C1 100n
R3 100K
GND GND
GND
VOCs / eCO2: CSS811
VCC
L1
MPZ1005S121C
C28 1uf
R4 4.7K
S1
VDD SDA
SCL
RESET WAKE
INT
SENSE
PWM AUX
EP GND ADDR
CCS811
SDA
SCL
R6 100K
GND
ADDR 0x5A
TEMPERATURE & HUMIDITY SENSOR
S4
NRESET VDD
ALERT SCL
ADDR SDA
VSS R
THERMAL
P$6 P$3 P$2 P$8
P$5 P$4 P$1 P$7 P$9
SHT31
L4 MPZ1005S121C
C4 100n
ADDR 0x44
PRESSURE SENSOR & ALTIMETER
VCC
MPZ1005S121C
L3
L5
S2
VDD SCL
CAP SDA
GND INT1
VDDIO INT2
MPL3115A2
C6 10uf
C5 100n
C7 100n
ADDR 0x60
PM_SENSOR
P$8 P$7 P$6 P$5 P$4 P$3 P$2 P$1 P$9 P$10
FIX FIX1
+5V
TX_PMS
RX_PMS
R1 10k 1/16W
R2 10k 1/16W
C2 10uf
C3 100n
BASE_BOARD PORT
CONN_DATA
FREE1
FREE2
FREE3
+5V
RX_PMS
TX_PMS
SCL
SDA
I2S_SCK
I2S_SD
I2S_FS
LIGHT SENSOR
L8
MPZ1005S121C
S5
VCC SCL
INT DVI
GND SDA
BH1730FVC
C8 100n
C9 100n
ADDR 0x29
SCK_URBAN_SHIELD_2.1
23/01/2019 08:28
Sheet: 1/1